Roll No. | | | | | | | |

EVEN END SEMESTER EXAMINATION - 2025

Name of the Course: M.Tech. (CAD/CAM)

Name of the Paper: ROBOTICS AND AUTOMATION

Semester: **II**

Paper Code: **MME 203**

Time: 3 Hours

Maximum Marks: 100

Note:

(i) All questions are compulsory.

(ii) Answer any two sub questions among a, b & c in each main question.

(iii) Total marks in each main question are twenty.

(iv) Each question carries 10 marks

Q1	(20 marks)	CO1
(a)	**Describe the following in brief: i) robotics, ii) fixed and mobile robots, iii) accuracy, iv) repeatability, and v) end-effectors.**	
(b)	**What are the essential components of a robot as a complete robotic system? Discuss each component briefly.**	
(c)	**What are the three laws of robotics? Also, discuss about the different types of robot reference frames.**	
Q2	(20 marks)	CO2
(a)	**What are the basic elements of an automated system? Describe with a diagram**	
(b)	**Describe the role of automation in the production system. What do you understand by the semiautomated and fully automated levels of automation?**	
(c)	**What are different types of automation? Describe with a diagram.**	
Q3	(20 marks)	CO3
(a)	**Describe the mapping in general frames with neat sketch and also discuss about the homogeneous transform.**	
(b)	**A frame {B} is rotated relative to a frame {A} about z axis by 30 degree, translated 2 units in x, and translated 3 units in y; the z axis is pointing out of the page. Position vector of a point with respect to frame {B} is given by $[1\ 3\ 0]^T$. Calculate position of that point with respect to frame {A}.**	
(c)	**A frame {Q} is rotated relative to another frame {P} about z axis by 60 degrees and translated 7 units in x and 5 units in y. The z axis is pointing out of the page. Thus, we have a description of ${}^{P}_{Q}T$. Find ${}^{Q}_{P}T$.**	
Q4	(20 marks)	CO4
(a)	**Write the different steps to derive the inverse kinematic model of a robotic manipulator using D-H parameters approach.**	
(b)	**Formulate the inverse kinematic model for the robotic manipulator given in the figure below. (assume the required parameters)**	

	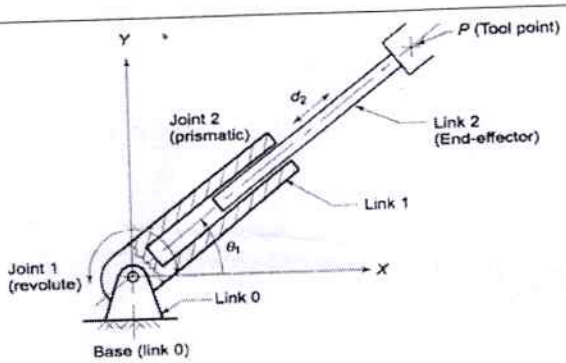	
(c)	**Formulate the forward kinematic model for the robotic manipulator shown in the figure below. (assume the required parameters)** 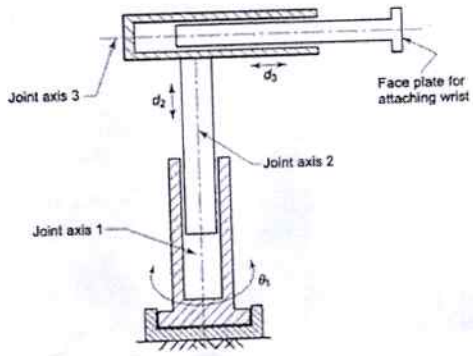	
Q5	(20 marks)	**CO5 & CO6**
(a)	**Formulate the dynamic model of the one degree of freedom manipulator shown in the following figure using the Lagrange-Euler formulation.** 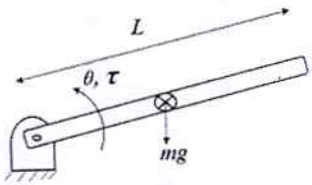	
(b)	**Formulate the dynamic model of the one degree of freedom manipulator shown in the figure above using the Newton-Euler formulation.**	
(c)	**Discuss about the role of Jacobian matrix for calculating the end-effector velocity, static forces, and manipulator singularities.**	